DESIGN SPECIFICATIONS:

THE EXTERIOR APPEARANCE OF BUILDS IN THESE PLANS IS FOR DESIGN REFERENCE ONLY. ACTUAL COLORS AND FINISHES ARE SUBJECT TO VARIATION DUE TO NATURAL LIGHT AND MATERIAL FACTORS. THE MATERIAL, COLOR, AND HARDWARE HAVE BEEN SELECTED FOR THE BEST ENGINEERING SOLUTION WHILE REMAINING WITHIN THE APPROVED BUDGET.

DIMENSION SPECIFICATIONS:

DIMENSIONS ARE BASED ON CONSTRUCTION BLUE PRINTS. IT IS MANDATORY FOR THE CONTRACTOR/INSTALLER TO PERFORM A THOROUGH SECOND VERIFICATION OF ALL CRITICAL SITE DIMENSIONS PRIOR TO FABRICATION OR COMMENCING WORK. THE DESIGNER IS NOT RESPONSIBLE FOR ERRORS RESULTING FROM UNVERIFIED DIMENSIONS.

ACCESS TO PRODUCT SPECS AND 3D VISUALIZATION:

THIS SET OF DRAWINGS CONTAINS HYPERLINKS HIGHLIGHTED IN YELLOW. CLICKING ON A HIGHLIGHTED NOTE WILL DIRECT YOU TO THE PRODUCT SPECIFICATION WEBPAGE. ADDITIONALLY, THE "3D MODEL LINK" HYPERLINK WILL OPEN A WEBPAGE CONTAINING BOTH A 3D RENDERED VIDEO PRESENTATION AND AN INTERACTIVE, NAVIGABLE 3D MODEL.

3DMODEL LINK

STAIN COLOR #1: RIFT WHITE OAK
FRAME + CAB FRONTS
(TO MATCH APPROVED SAMPLE)

ST-0141-MW
EXAMPLE SAMPLE LINK





A 1 PERSPECTIVE VIEW
Scale: NO SCALE

TRULY HANDY

28280 Old 41 Rd, Unit M7
Bonita Springs, FL, 34135
Tel: 239-221-9151

ZERN RESIDENCE

CLIENT
GULFSTAR CONSTRUCTION
rich@GulfstarConstruction.com

4455 Wayside Dr
Naples, FL 34119

DESIGNER
Eduardo Beluco
eduardo@trulyhandyllc.com

PROJECT
MASTER BATHROOM

NOTES:

DATE: 10/06/26

APPROVAL SIGNATURE:

APPROVAL STATUS:
PENDING

SCHEDULING DISCLAIMER:
All preliminary schedules are created based on approved drawings. Schedules will be automatically adjusted to reflect the final approval date.
We will notify everyone of the updated timeline as soon as available. Any delays in the approval of drawings and finishes will potentially delay the project delivery / install date.

Truly Handy LLC makes no representation or warranties, express or implied, with respect to the reuse of the data provided herewith, regardless of its format or the means of its transmission. There is no guarantee or representation to the user as to the accuracy, currency, suitability or reliability of this data for any purpose. The user accepts the data "as is", and assumes all risks associated with its use. By acceptance of this data, the user agrees not to transmit this data or provide access or any part of it to another party unless the user shall include with the data a copy of this disclaimer. Truly Handy LLC assumes no responsibility for actual or consequential damage incurred as a result of any user's reliance on this data. Final engineering subject to change without notice.

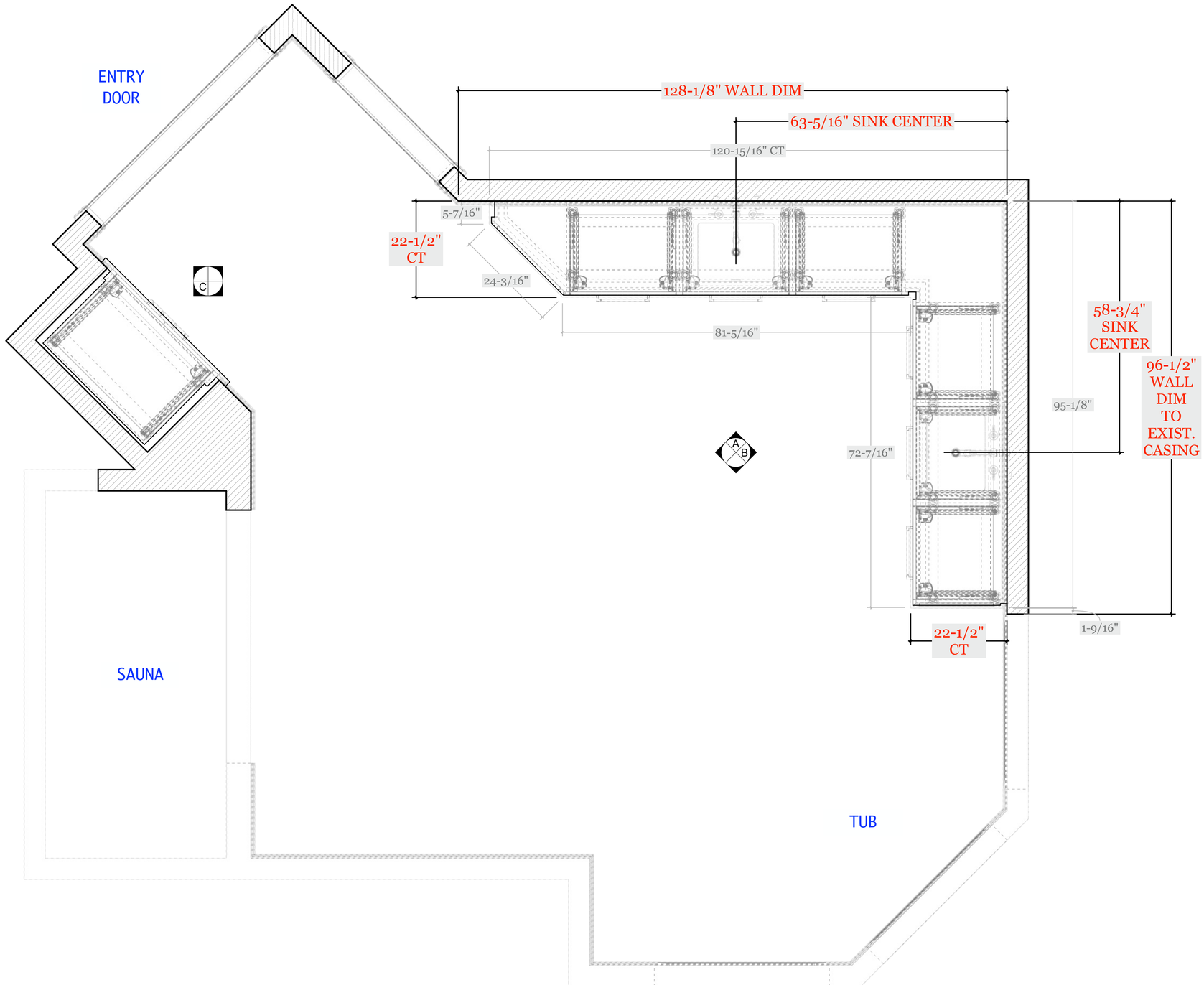

TOP A PLAN VIEW

Scale: 1" = 1'-0"

TRULY HANDY

28280 Old 41 Rd, Unit M7
Bonita Springs, FL, 34135
Tel: 239-221-9151

ZERN RESIDENCE

CLIENT
GULFSTAR CONSTRUCTION
rich@GulfstarConstruction.com

4455 Wayside Dr
Naples, FL 34119

DESIGNER
Eduardo Beluco
eduardo@trulyhandyllc.com

PROJECT
MASTER BATHROOM

NOTES:

DATE: 10/06/26

APPROVAL SIGNATURE:

APPROVAL STATUS:
PENDING

SCHEDULING DISCLAIMER:
All preliminary schedules are created based on approved drawings. Schedules will be automatically adjusted to reflect the final approval date.
We will notify everyone of the updated timeline as soon as available. Any delays in the approval of drawings and finishes will potentially delay the project delivery / install date.

Truly Handy LLC makes no representation or warranties, express or implied, with respect to the reuse of the data provided herewith, regardless of its format or the means of its transmission. There is no guarantee or representation to the user as to the accuracy, currency, suitability or reliability of this data for any purpose. The user accepts the data "as is", and assumes all risks associated with its use. By acceptance of this data, the user agrees not to transmit this data or provide access or any part of it to another party unless the user shall include with the data a copy of this disclaimer. Truly Handy LLC assumes no responsibility for actual or consequential damage incurred as a result of any user's reliance on this data. Final engineering subject to change without notice.

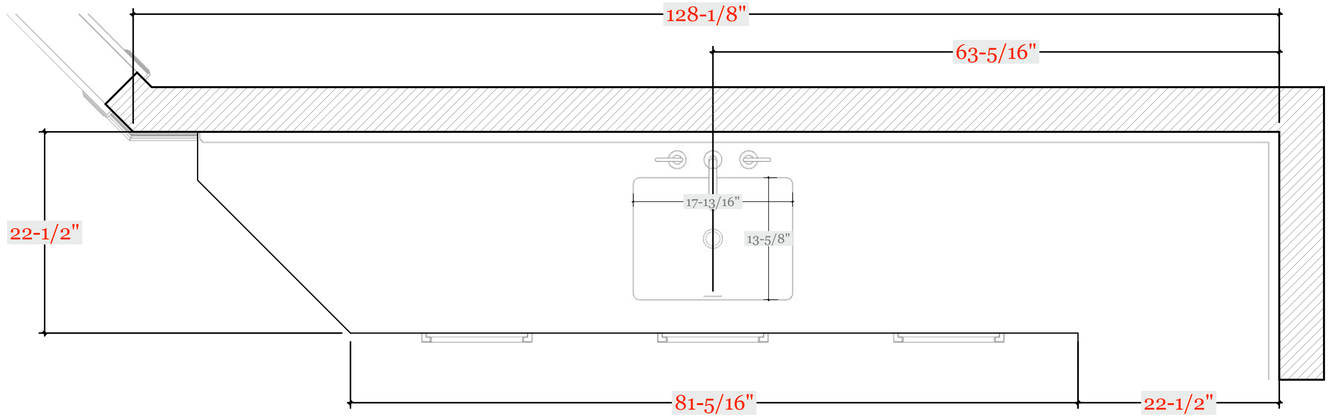

TOP A PLAN VIEW - COUNTERTOP (1/2" OVERHANG)

Scale: 1-1/2" = 1'-0"

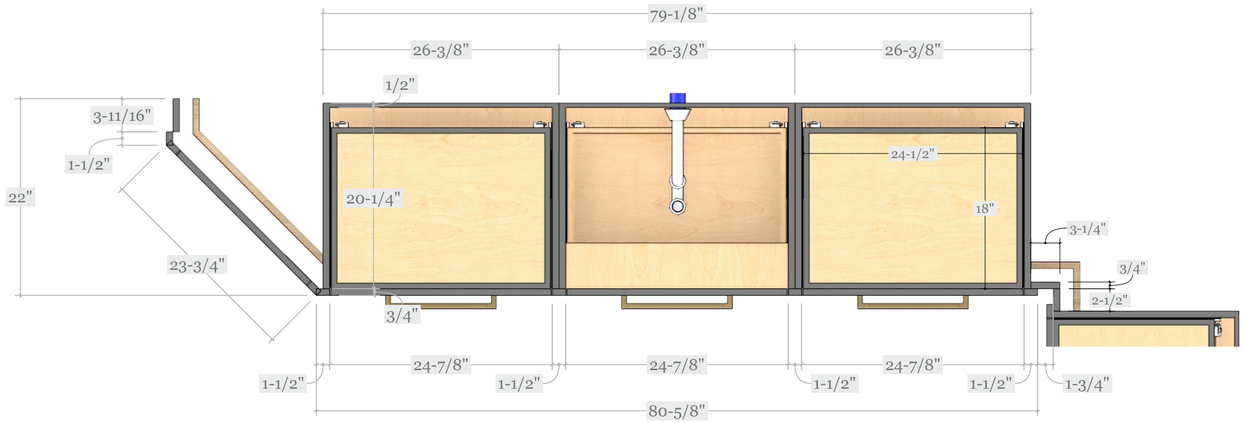

TOP A PLAN VIEW - SECTION

Scale: 1-1/2" = 1'-0"

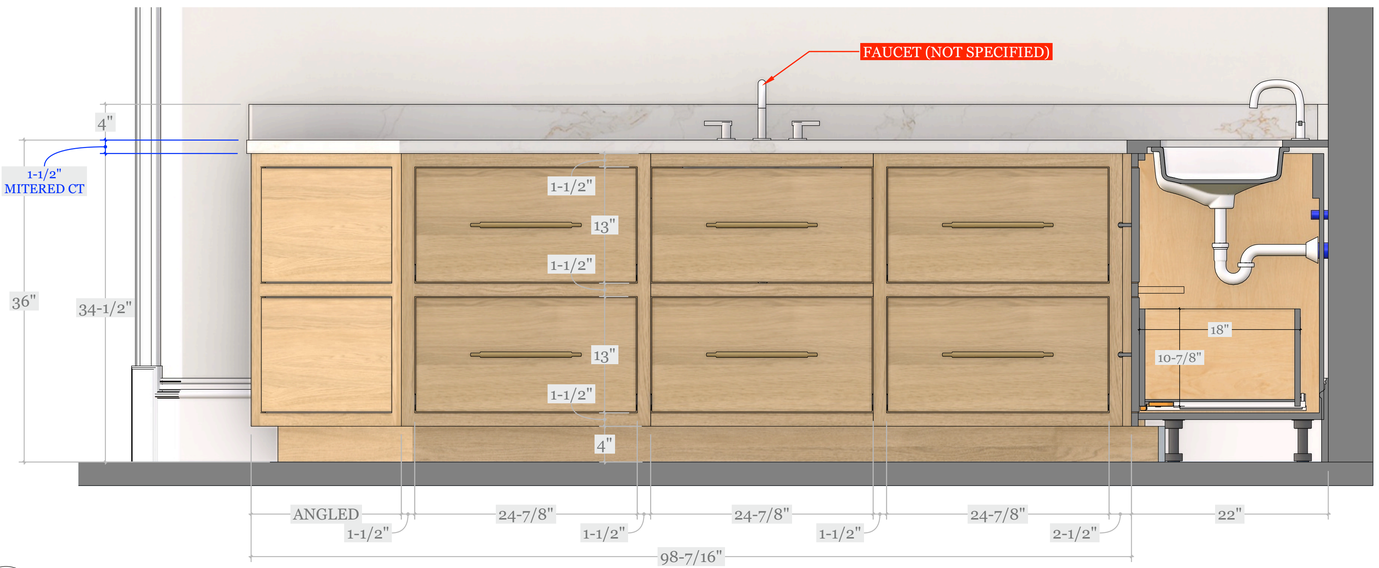

ELV A ELEVATION A

Scale: 1-1/2" = 1'-0"



CAB A CABINET STYLE : FACEFRAME 3/4" THICK

Scale: 1-1/2" = 1'-0"

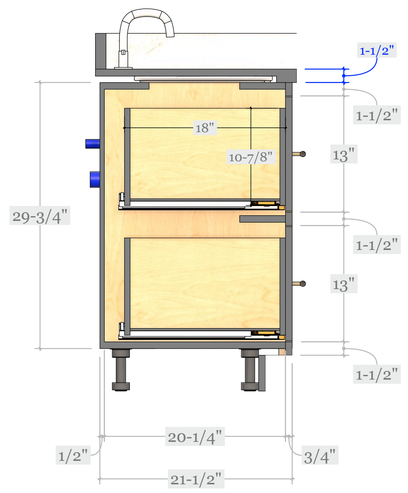

SEC A SECTION DRAWER BANK

Scale: 1-1/2" = 1'-0"

TRULY HANDY

28280 Old 41 Rd, Unit M7
Bonita Springs, FL, 34135
Tel: 239-221-9151

ZERN RESIDENCE

CLIENT
GULFSTAR CONSTRUCTION
rich@GulfstarConstruction.com

4455 Wayside Dr
Naples, FL 34119

DESIGNER
Eduardo Beluco
eduardo@trulyhandyllc.com

PROJECT
MASTER BATHROOM

NOTES:

DATE: 10/06/26

APPROVAL SIGNATURE:

APPROVAL STATUS:
PENDING

SCHEDULING DISCLAIMER:
All preliminary schedules are created based on approved drawings. Schedules will be automatically adjusted to reflect the final approval date.
We will notify everyone of the updated timeline as soon as available. Any delays in the approval of drawings and finishes will potentially delay the project delivery / install date.

Truly Handy LLC makes no representation or warranties, express or implied, with respect to the reuse of the data provided herewith, regardless of its format or the means of its transmission. There is no guarantee or representation to the user as to the accuracy, currency, suitability or reliability of this data for any purpose. The user accepts the data "as is", and assumes all risks associated with its use. By acceptance of this data, the user agrees not to transmit this data or provide access or any part of it to another party unless the user shall include with the data a copy of this disclaimer. Truly Handy LLC assumes no responsibility for actual or consequential damage incurred as a result of any user's reliance on this data. Final engineering subject to change without notice.

PAGE: 3

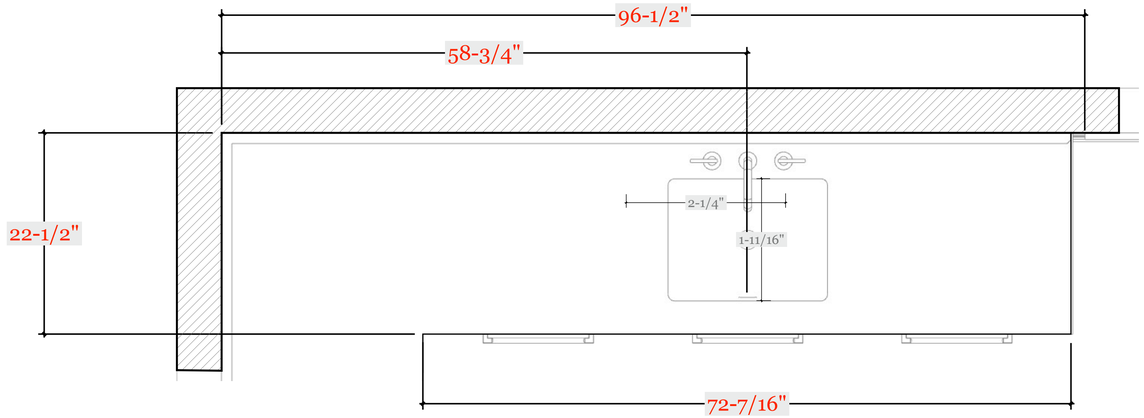

TOP B PLAN VIEW - COUNTERTOP (1/2" OVERHANG)

Scale: 1-1/2" = 1'-0"

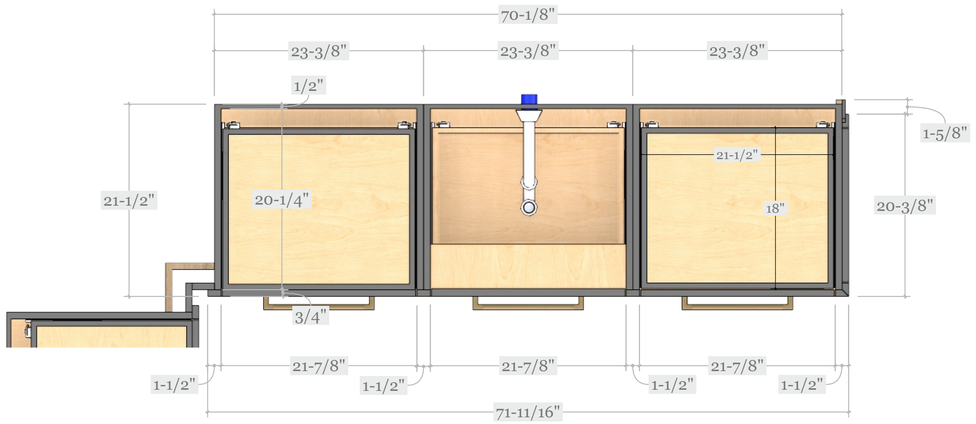

TOP B PLAN VIEW - SECTION

Scale: 1-1/2" = 1'-0"

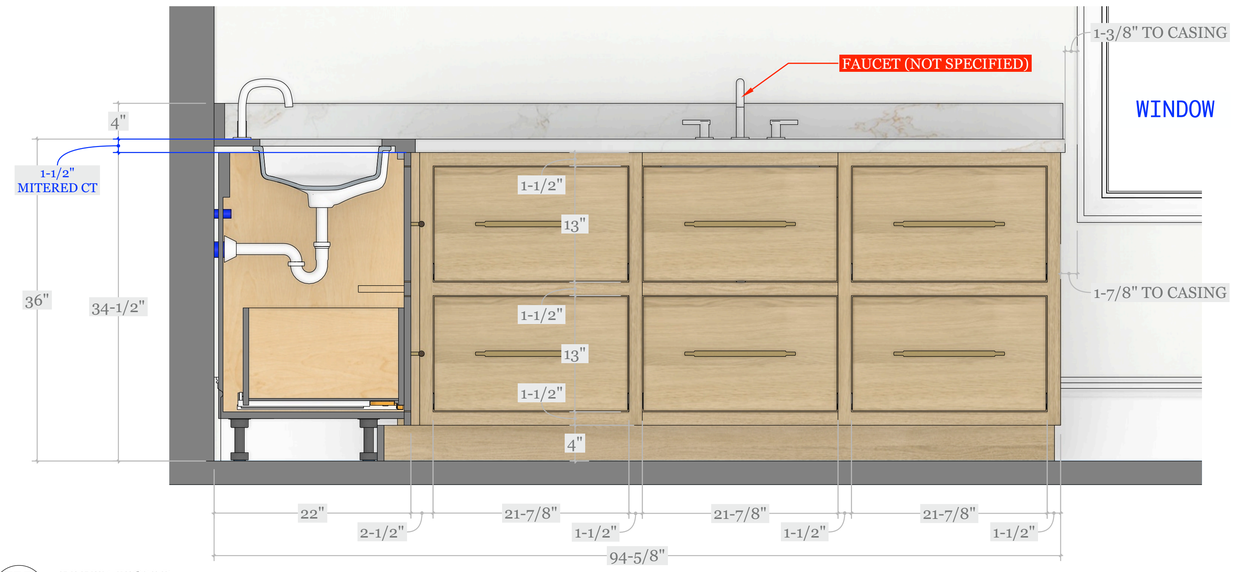

ELV B ELEVATION B

Scale: 1-1/2" = 1'-0"

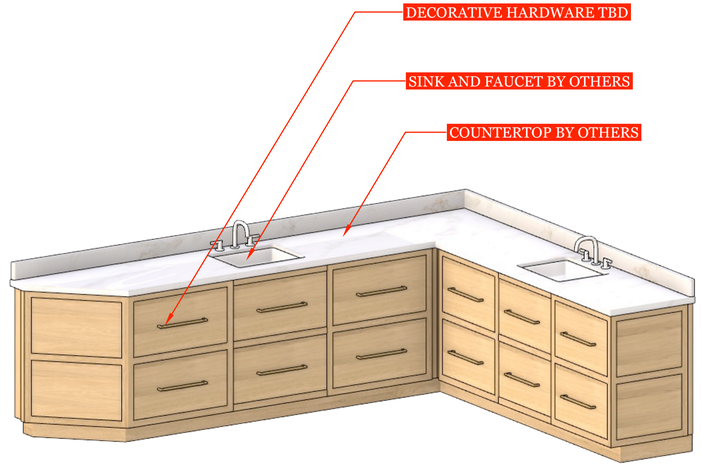

ISO AB ISOMETRIC VIEW - CABINETRY ONLY

Scale: 3/4" = 1'-0"

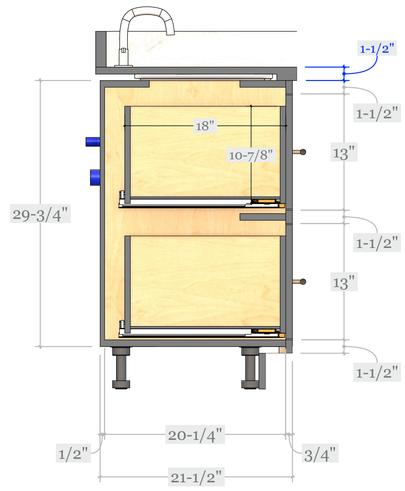

SEC A SECTION DRAWER BANK

Scale: 1-1/2" = 1'-0"

TRULY HANDY

28280 Old 41 Rd, Unit M7
Bonita Springs, FL, 34135
Tel: 239-221-9151

ZERN RESIDENCE

CLIENT
GULFSTAR CONSTRUCTION
rich@GulfstarConstruction.com

4455 Wayside Dr
Naples, FL 34119

DESIGNER
Eduardo Beluco
eduardo@trulyhandyllc.com

PROJECT
MASTER BATHROOM

NOTES:

DATE: 10/06/26

APPROVAL SIGNATURE:

APPROVAL STATUS:
PENDING

SCHEDULING DISCLAIMER:
All preliminary schedules are created based on approved drawings. Schedules will be automatically adjusted to reflect the final approval date.
We will notify everyone of the updated timeline as soon as available. Any delays in the approval of drawings and finishes will potentially delay the project delivery / install date.

Truly Handy LLC makes no representation or warranties, express or implied, with respect to the reuse of the data provided herewith, regardless of its format or the means of its transmission. There is no guarantee or representation to the user as to the accuracy, currency, suitability or reliability of this data for any purpose. The user accepts the data "as is", and assumes all risks associated with its use. By acceptance of this data, the user agrees not to transmit this data or provide access or any part of it to another party unless the user shall include with the data a copy of this disclaimer. Truly Handy LLC assumes no responsibility for actual or consequential damage incurred as a result of any user's reliance on this data. Final engineering subject to change without notice.

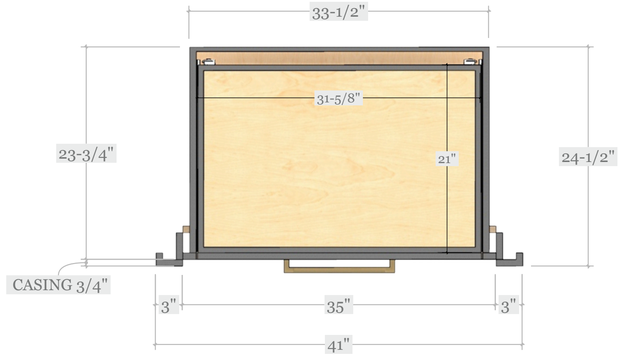

TOP B PLAN VIEW - SECTION
Scale: 1-1/2" = 1'-0"



ELV C ELEVATION C (LINEN CAB)
Scale: 1-1/2" = 1'-0"

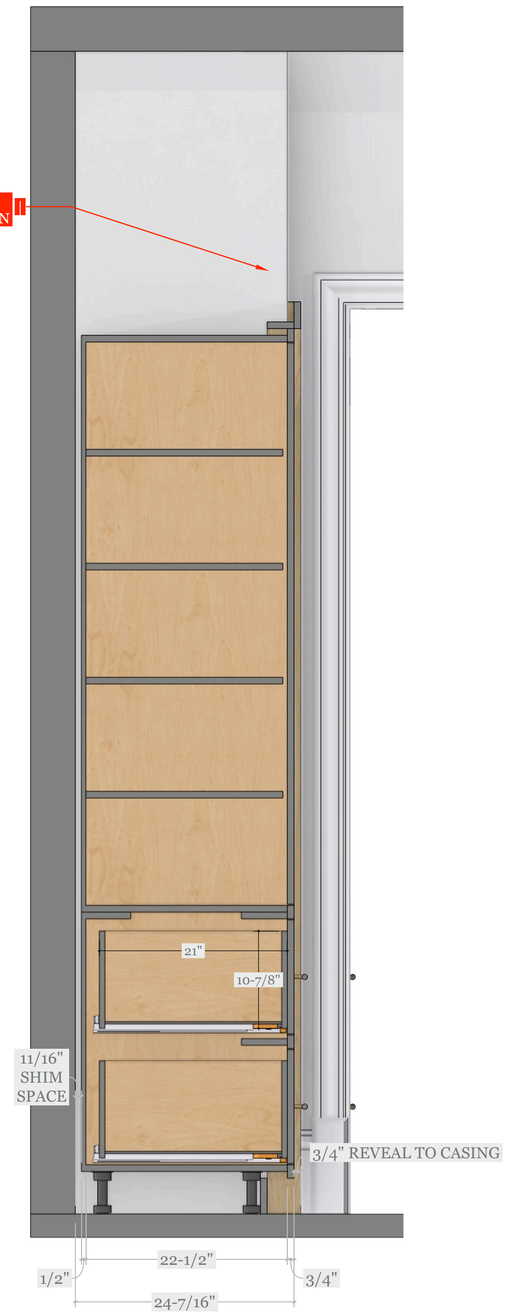

SEC C SECTION
Scale: 1-1/2" = 1'-0"



ISO C ISOMETRIC VIEW - CABINETRY ONLY
Scale: 1" = 1'-0"

TRULY HANDY
28280 Old 41 Rd, Unit M7
Bonita Springs, FL, 34135
Tel: 239-221-9151

ZERN RESIDENCE

CLIENT
GULFSTAR CONSTRUCTION
rich@GulfstarConstruction.com

4455 Wayside Dr
Naples, FL 34119

DESIGNER
Eduardo Beluco
eduardo@trulyhandyllc.com

PROJECT
MASTER BATHROOM

NOTES:

DATE: 10/06/26

APPROVAL SIGNATURE:

APPROVAL STATUS:
PENDING

SCHEDULING DISCLAIMER:
All preliminary schedules are created based on approved drawings. Schedules will be automatically adjusted to reflect the final approval date.
We will notify everyone of the updated timeline as soon as available. Any delays in the approval of drawings and finishes will potentially delay the project delivery / install date.

Truly Handy LLC makes no representation or warranties, express or implied, with respect to the reuse of the data provided herewith, regardless of its format or the means of its transmission. There is no guarantee or representation to the user as to the accuracy, currency, suitability or reliability of this data for any purpose. The user accepts the data "as is", and assumes all risks associated with its use. By acceptance of this data, the user agrees not to transmit this data or provide access or any part of it to another party unless the user shall include with the data a copy of this disclaimer. Truly Handy LLC assumes no responsibility for actual or consequential damage incurred as a result of any user's reliance on this data. Final engineering subject to change without notice.