DESIGN SPECIFICATIONS:

THE EXTERIOR APPEARANCE OF BUILDS IN THESE PLANS IS FOR DESIGN REFERENCE ONLY. ACTUAL COLORS AND FINISHES ARE SUBJECT TO VARIATION DUE TO NATURAL LIGHT AND MATERIAL FACTORS. THE MATERIAL, COLOR, AND HARDWARE HAVE BEEN SELECTED FOR THE BEST ENGINEERING SOLUTION WHILE REMAINING WITHIN THE APPROVED BUDGET.

DIMENSION SPECIFICATIONS:

DIMENSIONS ARE BASED ON CONSTRUCTION BLUE PRINTS. IT IS MANDATORY FOR THE CONTRACTOR/INSTALLER TO PERFORM A THOROUGH SECOND VERIFICATION OF ALL CRITICAL SITE DIMENSIONS PRIOR TO FABRICATION OR COMMENCING WORK. THE DESIGNER IS NOT RESPONSIBLE FOR ERRORS RESULTING FROM UNVERIFIED DIMENSIONS.

ACCESS TO PRODUCT SPECS AND 3D VISUALIZATION:

THIS SET OF DRAWINGS CONTAINS HYPERLINKS HIGHLIGHTED IN YELLOW. CLICKING ON A HIGHLIGHTED NOTE WILL DIRECT YOU TO THE PRODUCT SPECIFICATION WEBPAGE. ADDITIONALLY, THE "3D MODEL LINK" HYPERLINK WILL OPEN A WEBPAGE CONTAINING BOTH A 3D RENDERED VIDEO PRESENTATION AND AN INTERACTIVE, NAVIGABLE 3D MODEL.

3DMODEL LINK

STAIN COLOR #1: RIFT WHITE OAK
FRAME + COUNTERTOP
(TO MATCH APPROVED SAMPLE)

ST-0136-MW
EXAMPLE SAMPLE LINK

STAIN COLOR #2: RIFT WHITE OAK
DOOR SLABS
(TO MATCH APPROVED SAMPLE)

ST-0137-MW
EXAMPLE SAMPLE LINK

A 1 PERSPECTIVE VIEW
Scale: NO SCALE

TRULY HANDY
28280 Old 41 Rd, Unit M7
Bonita Springs, FL, 34135
Tel: 239-221-9151

LAPPE RESIDENCE

CLIENT
DESIGN BY ME
info@designbymellc.com

6897 Grenadier Blvd #403,
Naples, FL 34108

DESIGNER
Eduardo Beluco
eduardo@trulyhandyllc.com

PROJECT
DINING ROOM BUILT-IN

NOTES:

DATE: 09/07/26

APPROVAL SIGNATURE:

APPROVAL STATUS:
PENDING

SCHEDULING DISCLAIMER:
All preliminary schedules are created based on approved drawings. Schedules will be automatically adjusted to reflect the final approval date.
We will notify everyone of the updated timeline as soon as available. Any delays in the approval of drawings and finishes will potentially delay the project delivery / install date.

Truly Handy LLC makes no representation or warranties, express or implied, with respect to the reuse of the data provided herewith, regardless of its format or the means of its transmission. There is no guarantee or representation to the user as to the accuracy, currency, suitability or reliability of this data for any purpose. The user accepts the data "as is", and assumes all risks associated with its use. By acceptance of this data, the user agrees not to transmit this data or provide access or any part of it to another party unless the user shall include with the data a copy of this disclaimer. Truly Handy LLC assumes no responsibility for actual or consequential damage incurred as a result of any user's reliance on this data. Final engineering subject to change without notice.

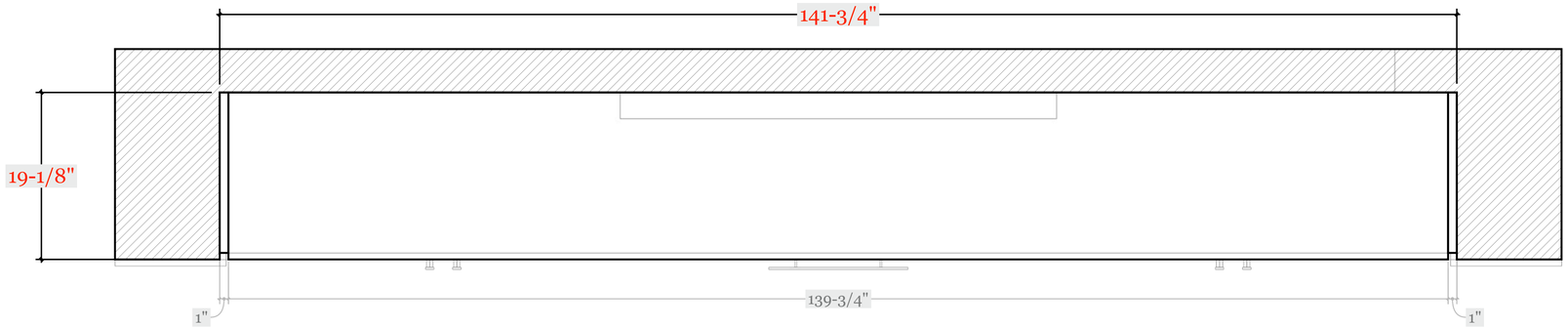

TOP A PLAN VIEW

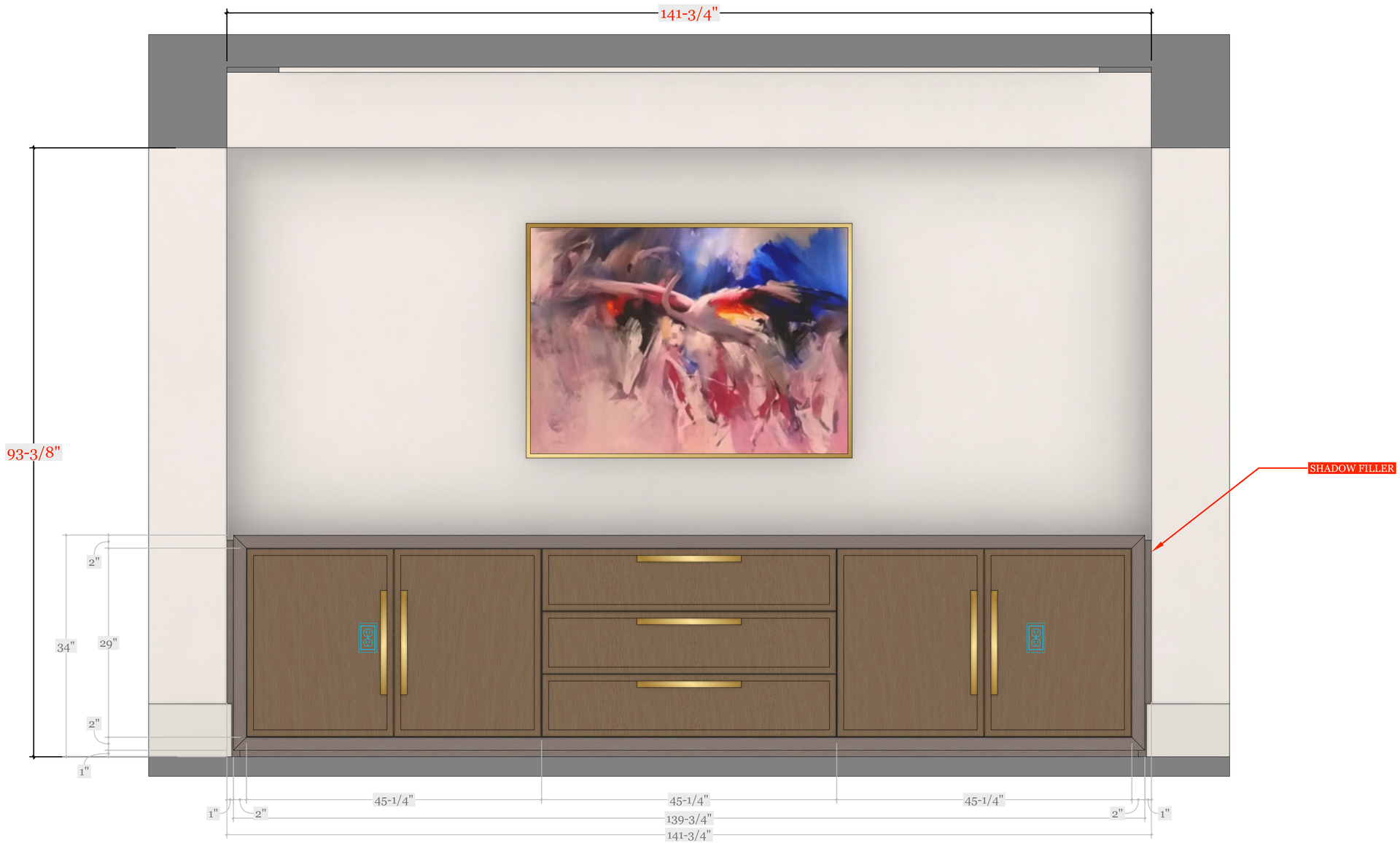

ELV A ELEVATION A

TRULY HANDY
28280 Old 41 Rd, Unit M7
Bonita Springs, FL, 34135
Tel: 239-221-9151

LAPPE RESIDENCE

CLIENT
DESIGN BY ME
info@designbymellc.com

6897 Grenadier Blvd #403,
Naples, FL 34108

DESIGNER
Eduardo Beluco
eduardo@trulyhandyllc.com

PROJECT
DINING ROOM BUILT-IN

NOTES:

DATE: 09/07/26

APPROVAL SIGNATURE:

APPROVAL STATUS:
PENDING

SCHEDULING DISCLAIMER:
All preliminary schedules are created based on approved drawings. Schedules will be automatically adjusted to reflect the final approval date.
We will notify everyone of the updated timeline as soon as available. Any delays in the approval of drawings and finishes will potentially delay the project delivery / install date.

Truly Handy LLC makes no representation or warranties, express or implied, with respect to the reuse of the data provided herewith, regardless of its format or the means of its transmission. There is no guarantee or representation to the user as to the accuracy, currency, suitability or reliability of this data for any purpose. The user accepts the data "as is", and assumes all risks associated with its use. By acceptance of this data, the user agrees not to transmit this data or provide access or any part of it to another party unless the user shall include with the data a copy of this disclaimer. Truly Handy LLC assumes no responsibility for actual or consequential damage incurred as a result of any user's reliance on this data. Final engineering subject to change without notice.

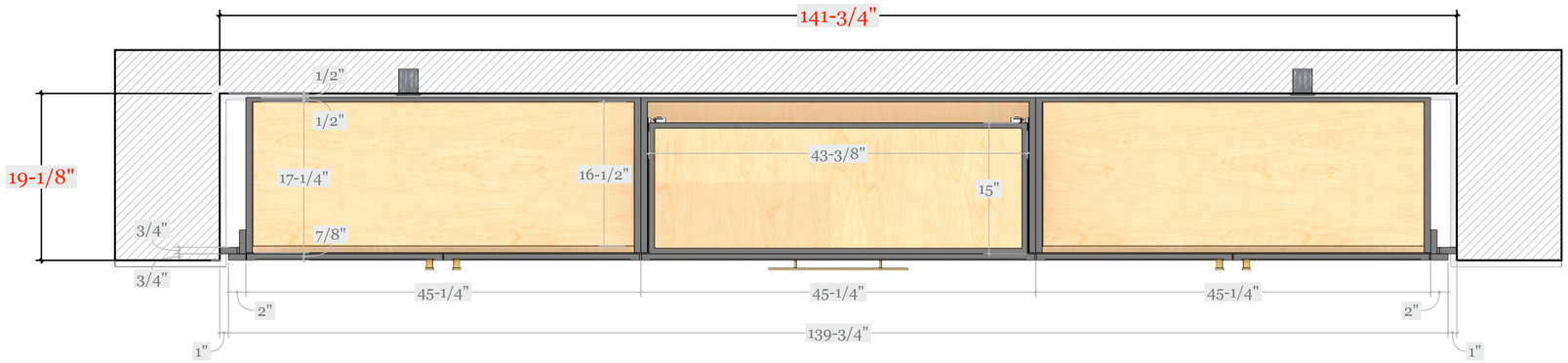

TOP A PLAN VIEW

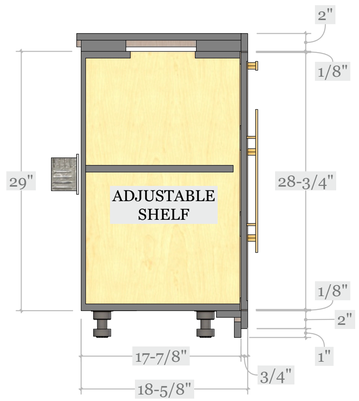

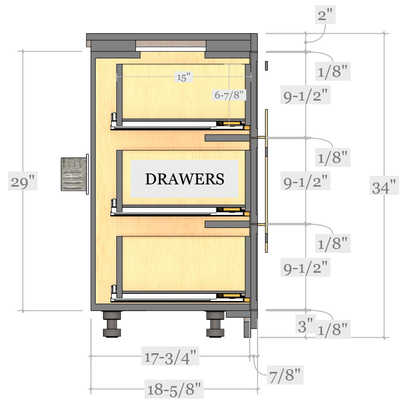

SD A SIDE SECTIONS

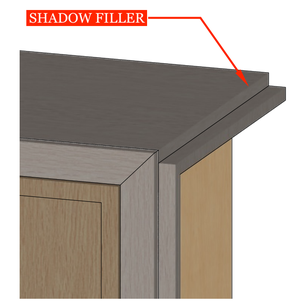

D A DOOR DETAIL - FILLER DETAIL

ISO A ISOMETRIC VIEW - EXPLODED

TRULY HANDY
28280 Old 41 Rd, Unit M7
Bonita Springs, FL, 34135
Tel: 239-221-9151

LAPPE RESIDENCE

CLIENT
DESIGN BY ME
info@designbymellc.com

6897 Grenadier Blvd #403,
Naples, FL 34108

DESIGNER
Eduardo Beluco
eduardo@trulyhandyllc.com

PROJECT
DINING ROOM BUILT-IN

NOTES:

DATE: 09/07/26

APPROVAL SIGNATURE:

APPROVAL STATUS:
PENDING

SCHEDULING DISCLAIMER:
All preliminary schedules are created based on approved drawings. Schedules will be automatically adjusted to reflect the final approval date.
We will notify everyone of the updated timeline as soon as available. Any delays in the approval of drawings and finishes will potentially delay the project delivery / install date.

Truly Handy LLC makes no representation or warranties, express or implied, with respect to the reuse of the data provided herewith, regardless of its format or the means of its transmission. There is no guarantee or representation to the user as to the accuracy, currency, suitability or reliability of this data for any purpose. The user accepts the data "as is", and assumes all risks associated with its use. By acceptance of this data, the user agrees not to transmit this data or provide access or any part of it to another party unless the user shall include with the data a copy of this disclaimer. Truly Handy LLC assumes no responsibility for actual or consequential damage incurred as a result of any user's reliance on this data. Final engineering subject to change without notice.